GIUSEPPE AREZZI

DESIGN STUDIO

RAGUSA / MILANO

GIUSEPPE AREZZI (1993) IS GIUSEPPE AREZZI DESIGN STUDIO, A PRACTICE THAT WORKS IN THE FIELDS OF PRODUCT AND INTERIOR DESIGN BASED BETWEEN RAGUSA AND MILAN.

After graduating in Interior Design at the Politecnico di Milano, Giuseppe collaborated for several years with some renowned design studios in Milan.

The studio gazes the domestic issues of contemporary living, solved through adaptable and replicable pieces, answering to everyday practical needs.

Since 2017, Giuseppe founded his own practice, collaborating with design studios, universities, institutions, companies, galleries and private clients such us Politecnico di Milano, Domus Academy, Cantiere Galli Design, Desine, It's Great Design, Istituto Italiano di Cultura di Parigi and many others.

Giuseppe is professor at IED in Como.

His work has been published and exhibited internationally.

SELECTED PROJECTS →

MANIC# ARMCHAIR
SELF PRODUCTION
2012

More than just a land of contrasts, Sicily is a land of history. History not only about peoples and kings, but also about large families of the earth formed, hearths ordered.
A tradition, ours, which looks at the best form of all: the essential. The armchair Manic# comes entirely from our land, have not been foreign hands to draw it and build it. Hoes, brooms, rolling pins. Wood not only of our land, but also of our homes.
The same tools that our ancestors have used today give a new life to a product of a land that looks to the past as it flies towards the future, firmly in the traditions and unbeaten in inventiveness.

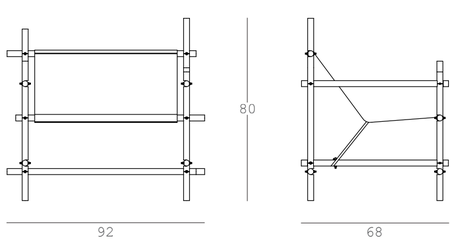

MANIC# armchair is a “self-produced” project, it is completely demontable and it is made in beech solid wood brooms, glossy canvas and leather straps.
MANIC# has been selected and exhibited at the Lake Como Design Fair’s first edition in September 2018.

BEATA SOLITUDO
INSTALLATION
CANTIERE GALLI DESIGN
CURATED BY DOMITILLA DARDI
ROME
2017

Beata Solitudo is the shelter of the contemporary hermit - technological, dynamic and primitive - a small house with everything you need to live on your own: a place where to cook, a place where to eat, a place where to bathe, a place where to sleep and an attic for storing food and looking at the stars; there are also spaces to breed animals and all the tools one might need to exploit renewable energy sources.
This shelter has been designed as a product rather than as definitive architecture; with his rigid, self-supporting structure it can be placed anywhere in the world. The wooden walls, conceived as frames, allow to weave a different coverage every time, depending on where the refuge is assembled: it can turn into a house made of carpets if settled down in Mongolia or in the desert, of palm trees in Thailand or in equatorial countries, of sealskin in Antarctica …
Beata Solitudo is not just a physical space, it also aims to represent the lifestyle of the technological dynamic and primitive hermit.
This installation is part of the project "Una Stanza Tutta Per Sé", curated by Domitilla Dardi at Cantiere Galli Design in Rome.

The room: The two self-supporting walls are made of solid walnut wood and linen fabric.
The floor is a woven coconut fiber carpet.
The table at the center of the room - also made of solid American walnut wood - is designed exclusively for this exhibition.
The maquette - 1:20 scale - made of American walnut wood and linen fabric, is made all by hand.
The room's walls are blue.
The ceiling is covered with a blue cotton fabric.

SOLISTA
PROD. DESINE
2018

A Servomuto (valet stand): no name was more suitable to describe an use. This involves a humble, clearly functional typology, made to serve more than to represent. In fact, it works to support clothes, to fold shirt and trousers, to prepare the evening before what will be worn the next morning, even the small accessories or jewels that complete the daily wardrobe. However, Solista is a valet stand that has detached itself from the choir. It realized that he had his own personality and that he could sing his solo. It becomes aware that it is not invisible and servile, but also beautiful and worthy of being appreciated when it is undressed. And then - like every good soloist - it knows how to return to the chorus of the domestic landscape and give its silent contribution.

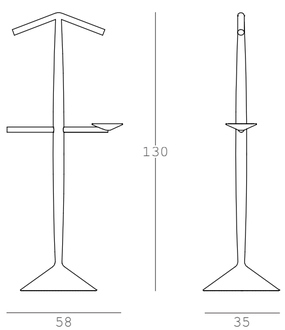

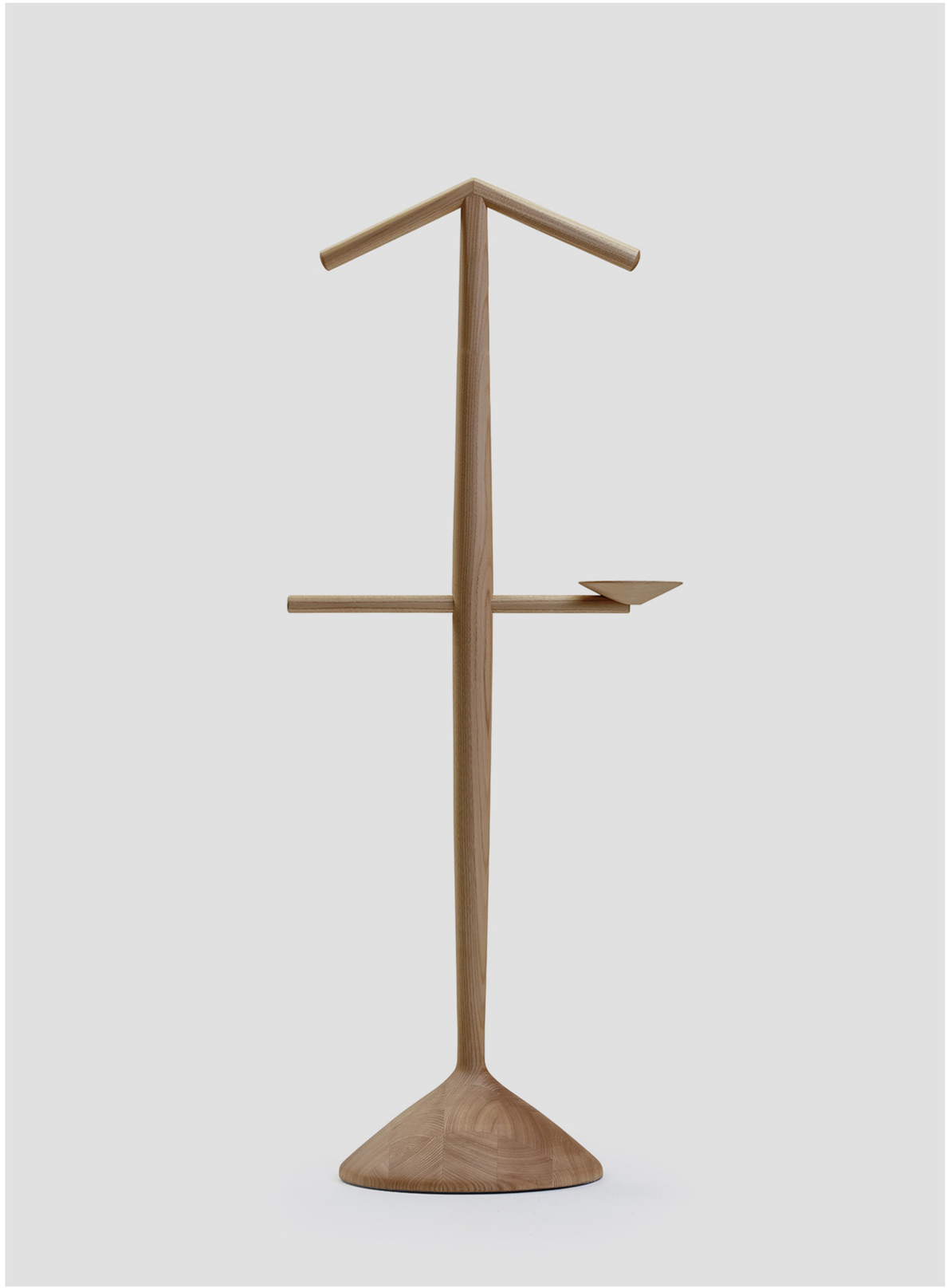

Solista is produced by the small brand Desine, it is made in chestnut solid wood, it can be finished also with a matt varnish.
Solista has been selected and exhibited at EDIT Napoli in 2019 and at the exhibition “Frontiere” part of the first edition of the Porto Design Biennale in 2019/2020.

BINOMIO
EDITION IT'S GREAT DESIGN
2019

Binomio is a hybrid piece, a two-sided object extending on three simple shelves placed at different heights from the floor. Its functions are many: it can be used as a desk or as a dressing room, but it can also be a table for dining alone, a bench to take off your shoes as you enter the house, a hanger, a bedside table, a bookshelf, an altar or a prie-dieu, as well as a support for any type of object. Binomio is made of solid beech wood and lacquered with bordeaux varnish. It is a domestic totem, imposing with its height but simple in its forms: ready to inspire and host many of the countless daily actions.

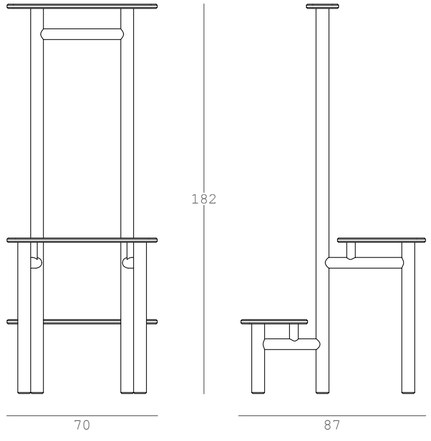

Binomio, presented for the first time at the Italian Institute of Culture in Paris, is handcrafted in Ragusa, Sicily, and it is edited in collaboration with “It’s Great Design” in Paris.
Binomio has been shortlisted as one of the 23 finalist projects among 862 international entries at the Pure Talents Design Contest 2020 at Imm Cologne.

TRAMOGGIA
EDITION IT'S GREAT DESIGN
2020

Tramoggia, is the contemporary reinterpretation of the "cassapanca", it is realized in painted steel sheet and it is available in two versions.
The project proposes a new aesthetic, far from the beautiful solid wood cassapanca, more related to a vernacular culture, but at the same time functional and spacious.
This new version is realized with a 1.5 mm thick steel sheet which makes the archetype of the chest more contemporary and light - thanks to its thin sections and a slight detachment from the ground.
The design was developed around the pyramid shape of the chest.
Tramoggia is resistant and colored, it is available in single or double seat, and it can be indoor and outdoor.

TRAMOGGIA ARMCHAIR

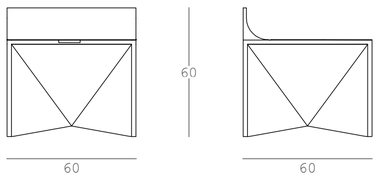

TRAMOGGIA BENCH

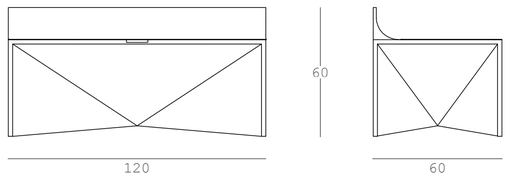

Tramoggia, is handcrafted in Varese, Italy, and it is edited in collaboration with “It’s Great Design” in Paris.

SELECTED EXHIBITIONS

2020
_At Home 20.20 Projects For Contemporary Housing, MAXXI Museum, Rome
_Presentation 00 Design Brussels, Area 42, Bruxelles
_ XXVI Compasso d'Oro - Mettere Radici, ADI Design Museum, Milan
_Pure Talents, Imm Cologne
_Best of Pure Talents, ZOW Fair
_Nèo, Courmayeur Design Weekend

2019
_Frontiere, New Expressions of Contemporary Design: Porto Design Biennale
_Lake Como Design Fair
_Edit Napoli
_Guiltless Plastic, Rossana Orlandi Gallery, Milan
_Giuseppe Arezzi, Dal Soggetto all'Oggetto: Italian Institut of Culture in Paris

2018
_Lake Como Design Fair
_100×100 Achillle: Fondazione Achille Castiglioni, Milan
_Send Me The Future: Subalterno1 Gallery, Milan

2017
_Giuseppe Arezzi, Beata Solitudo: "Una Stanza Tutta Per Sé | Cantiere Galli Design", Rome

2016
_New Craft | Call Under 35: XXI Triennale, Milan

THANKS TO:

Cantiere Galli Design
Domitilla Dardi
Desine
Istituto Italiano di Cultura di Parigi
It's Great Design/Margherita Ratti

PHOTO CREDITS:

Max Rommel
Francesco Conti
Studio Giunta
Melissa Carnemolla

giuseppearezzi.com
info@giuseppearezzi.com